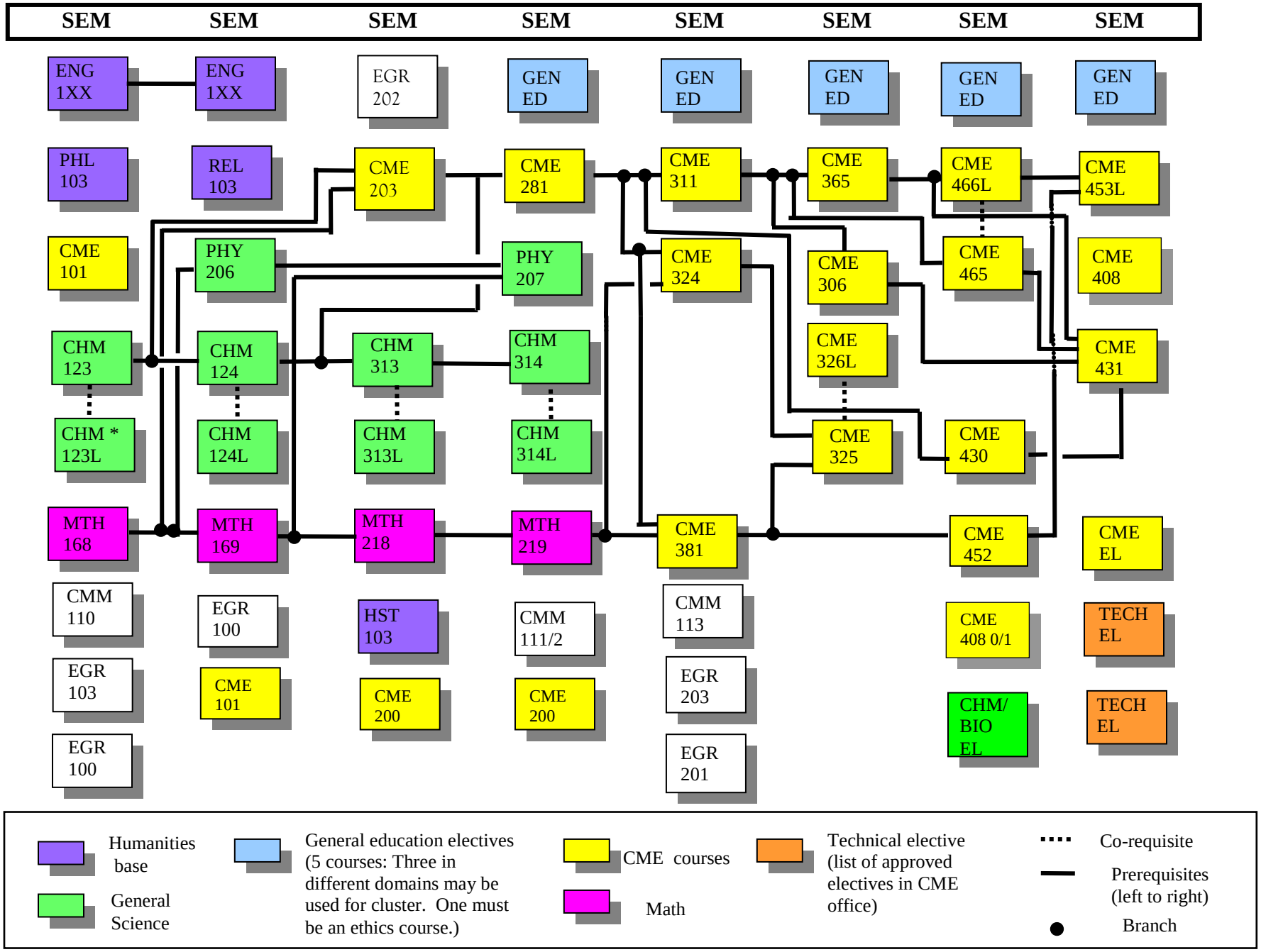BACHELOR OF CHEMICAL ENGINEERING 2009